DWG. NO.	SH.	REV.
M-9077051	1	H

CUD

ITEM NO.	DESCRIPTION	QTY
1	JACK HOUSING	1
2	O-RING	1
F1 3	BLACK METAL NUT- SEE NOTE 6	1
4	FACEPLATE SEAL	1
5	JACK/CONTACT ASSEMBLY	1

REV.	ECO NO.	REVISIONS	BY	DATE	APVD.
F	1448	F1: REPLACE JAM NUT WITH BLACK METAL NUT. F2: ADDED NOTE 6 F3: NOTE 1 UPDATED FOR GOLD PLATING ALTERNATIVE	RCS	4/10/07	DRH 5/3/07
G	1488	G1: PCB LAYOUT DIMENSIONS REVISED	RCS	5/9/07	D.G. 5/9/07
H	1987	H1: UPDATED DWG. NO.	WP	10/21/08	D.G. 10/27/08

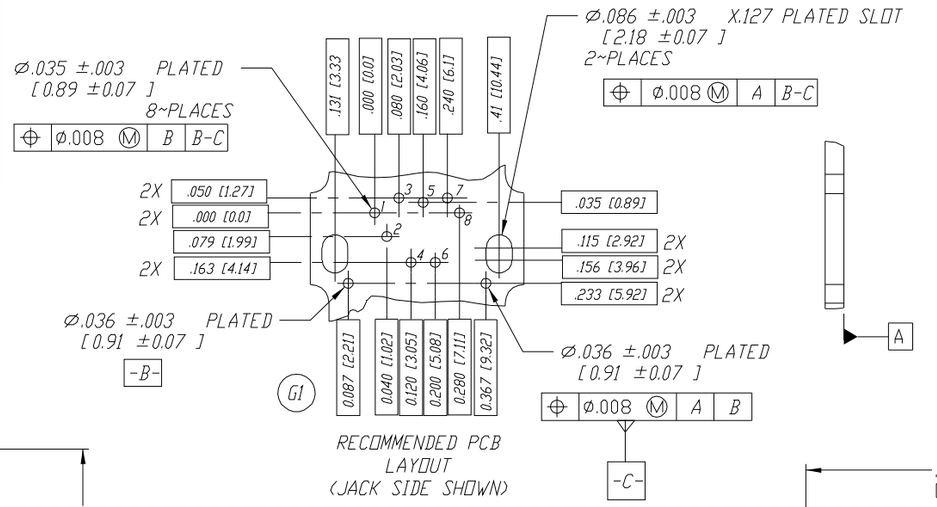

RECOMMENDED PCB LAYOUT (JACK SIDE SHOWN)

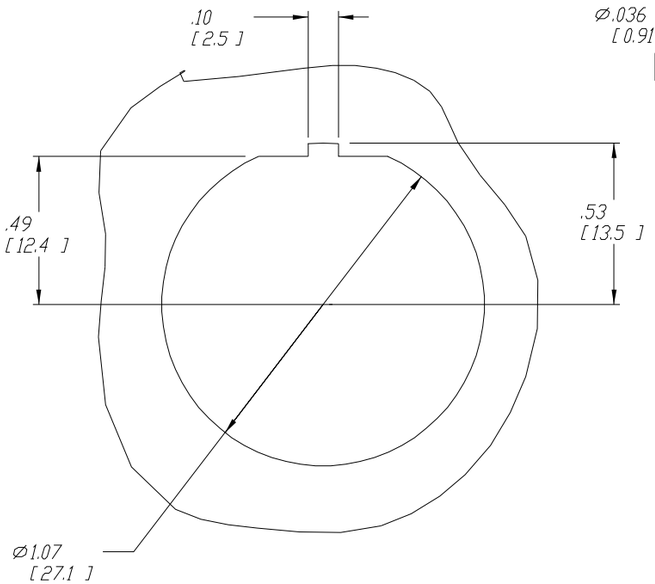

PANEL CUT - OUT SEE NOTE 3

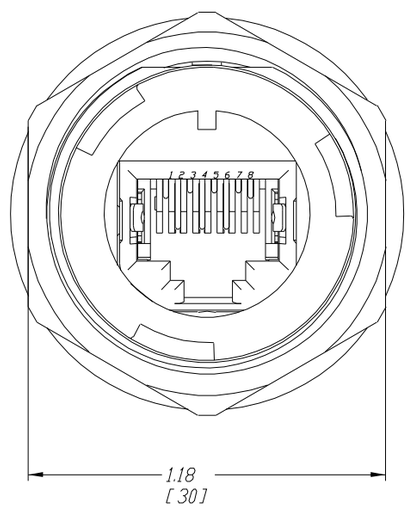

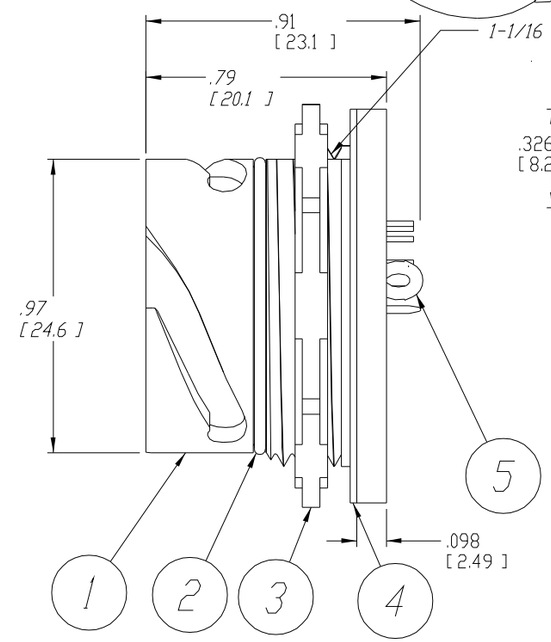

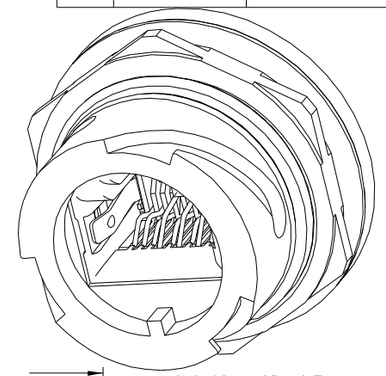

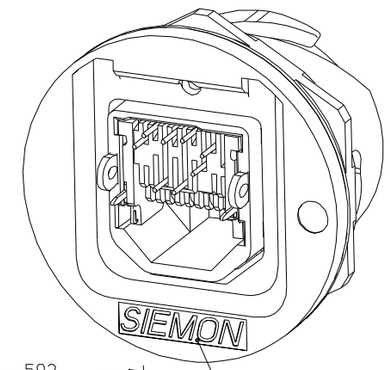

CUSTOM LOGO OPTION IS AVAILABLE

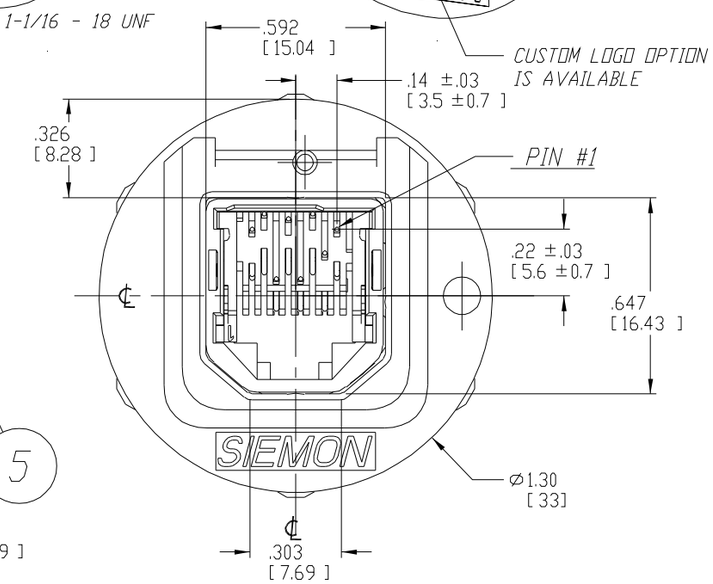

NOTES:

F2 6. BLACK CHROME PER MIL-DTL-14528D (20-50MICROINCHES) OVER NICKEL PLATED ZINC DIECAST
5. DO NOT SOLDER PLATED JACK RETENSION POSTS INTO PLATED SLOTS ON PCB. DESIGN IS FOR PRESS-FIT.
4. FOR MORE INFORMATION PLEASE CONTACT A SIEMON COMPANY CUSTOMER SERVICE REPRESENTATIVE.
3. MAXIMUM PANEL THICKNESS = .035"-.12" [.9mm - 3mm]
2. PCB THICKNESS = .060"
F3 1. MATERIAL: JACK HOUSING - GLASS FILLED PBT
CONTACTS - HIGH GRADE COPPER ALLOY 135-160 KSI TENSILE STRENGTH, WITH 50 MICROINCHES MIN. ELECTROPLATED HARD GOLD OVER 100 MICROINCHES MIN. NICKEL, OR 3-8 MICROINCHES GOLD FLASH OVER 40 MICROINCHES MIN. 80 PALLADIUM/20 NICKEL OVER 75 MICROINCHES MIN. LOW STRESS NICKEL UNDERPLATE.

PROPRIETARY INFORMATION
THIS DOCUMENT CONTAINS PROPRIETARY INFORMATION OF THE SIEMON COMPANY AND IS DELIVERED ON THE EXPRESSED CONDITIONS THAT IT IS NOT TO BE DISCLOSED OR REPRODUCED IN WHOLE OR PART, OR USED FOR MANUFACTURING FOR ANYONE OTHER THAN THE SIEMON COMPANY WITHOUT ITS WRITTEN CONSENT AND THAT NO RIGHT IS GRANTED TO DISCLOSE OR SO USE ANY INFORMATION CONTAINED IN SAID DOCUMENT.

THE SIEMON COMPANY
101 SIEMON COMPANY DRIVE
WATERTOWN, CT 06795
(860) 945-4200 www.siemon.com

TOLERANCES		DRAWN BY E. VERONESI	DATE 11/15/01
.00	±.02	CHECKED BY F. MITCHELL	DATE 11/15/01
.000	±.010		
.0000	-	ENGINEER F. MITCHELL	DATE 11/15/01
ANGLE	1°		

ANSI Y14.5M-1982 OR ISO 1101, 129 & 3040

DIMENSIONS IN SQUARE BRACKETS ARE [mm], ALL OTHER DIMENSIONS ARE INCHES. DO NOT SCALE

TITLE INDUSTRIAL CONNECTOR OEM OUTLET ASSEMBLY SCTP

DWG. NO. M-9077051 (H1)

PART NO. XMJ-88-S REV. H

SCALE 2:1 SHEET 1 OF 1

DWG. NO. B-9077051 SH. 1 REV. H

CUSTOMER USE DRAWING