DataKeep 600mm Cabinet

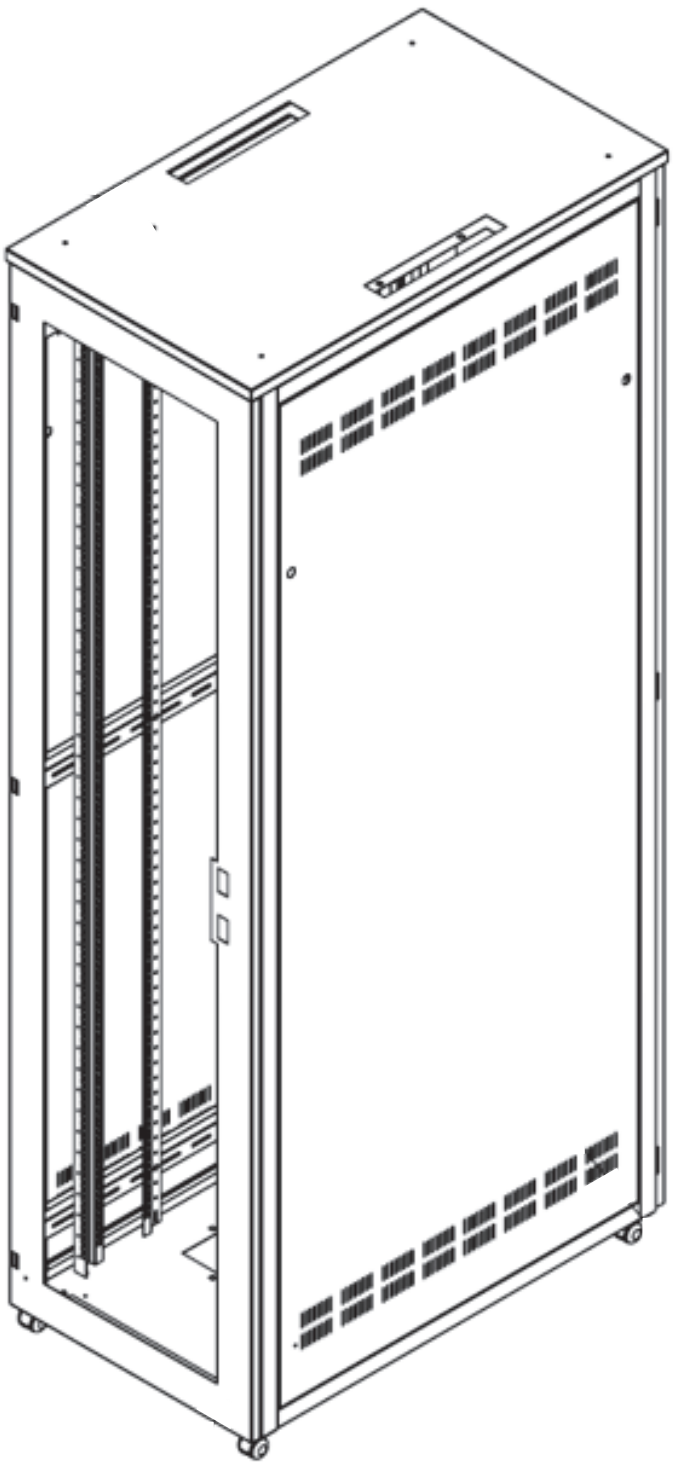

SIEMON™

www.siemon.com

Safety Information

WARNING

- Read and understand all instructions for proper installation and use of this product as improper use may lead to serious injury or death
- To remove the cabinet from the pallet for final placement, ensure the pallet is located on a level surface and remove the two (2) bolt-down brackets. Once removed, be sure the sufficient personnel to safely remove the cabinet from the pallet.

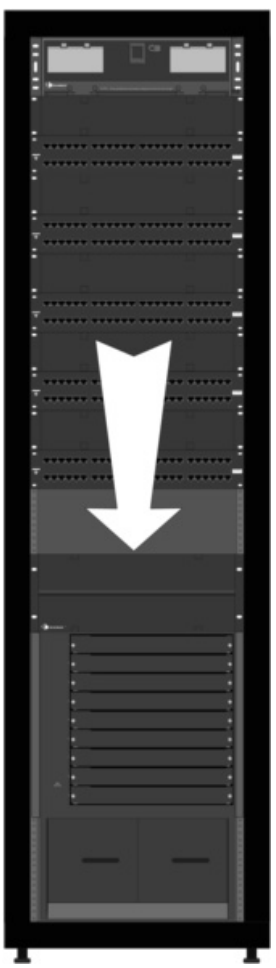

NOTE: These two (2) bolt-down brackets can also be used as stabilizing brackets once the cabinets are in their final position within the Telecommunications space.

- Obtain adequate assistance to stabilize the cabinet during movement. Do not attempt to move large cabinets with a single person. All equipment must be unloaded from the cabinet prior to movement.
- “Temporary Transport”
Optional castors are available for relocation of the cabinets. While castors are capable of supporting a fully loaded cabinet, they should only be used to move the cabinet between locations. When relocating cabinets using castors, they must be moved with extreme care a they may tip if they experience sudden stops, excessive force, or travel over irregular surfaces. It is recommended to move the cabinet using the front or rear of the cabinet as the leading edge – do not push on the sides. Once in place, the leveling feet (and bolt-down brackets) shall be fully deployed to offer maximum stability.
- A standalone cabinet should be leveled, stable and anchored to the floor. Two or more cabinets can be bayed together (coupled) to enhance their stability. Each cabinet should be anchored to the floor.
- Before loading equipment in the cabinet, be sure to adjust the leveling feet to level the cabinet. Do not use castors to stabilize the cabinet, always anchor the cabinet frame to the floor.
- Always load the cabinet such that the heaviest equipment (e.g. UPS Units, large enterprise switches) is located at the lowest point in the cabinet and add lighter equipment on higher levels. This will serve to further reduce the potential risk of cabinets tipping over. Utilize the bolt-down brackets will also help in this regard. The same consideration should be taken when and if shelving is deployed within the cabinet – especially when using sliding shelves – as loads placed on them destabilize the cabinet when extended from within the confines of the cabinet.
- The maximum load of the cabinet should not exceed; “TR” 800kg (1760lbs), “DC” 1000kg (2200lbs)
- The maximum anticipated ambient temperature inside a fully loaded cabinet system is (10°C – 60°C)
- The enclosure cabinets are intended to be installed in accordance with all applicable requirements of the National Electrical Code (NEC) and the local Authority Having Jurisdiction (AHJ).
- The minimum spacings between the accessories and components and the enclosure cabinet shall be maintained for safe operation of the equipment when installed in accordance with the NEC.
- The 600mm cabinet can support many equipment configurations. The amount of force required to tip or destabilize the cabinet differs with each configuration. Be sure to read and follow your equipment manufacturer’s specific assembly and safety instructions.
- When servicing slide mounted equipment (e.g. – servers, KVM devices), secure all equipment, other than the unit being serviced, in position to prevent them from inadvertently sliding out and destabilizing the cabinet. Also, be sure to extend only one sliding unit at a time as the extension of multiple units may result in the cabinet tipping over. When extending sliding units, do so very slowly as quick extension of these units can also cause the cabinet to tip over.

Leveling

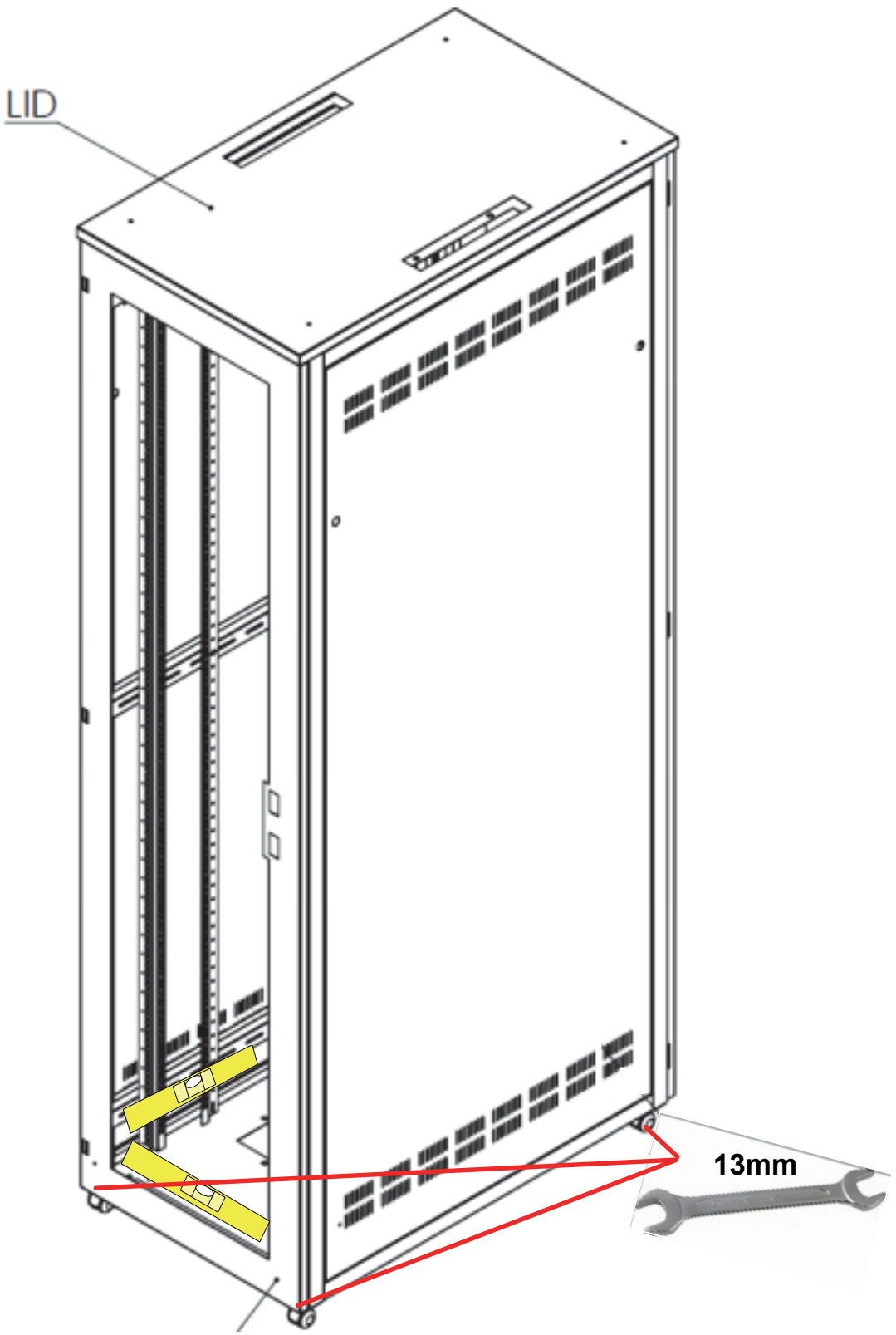

Baying

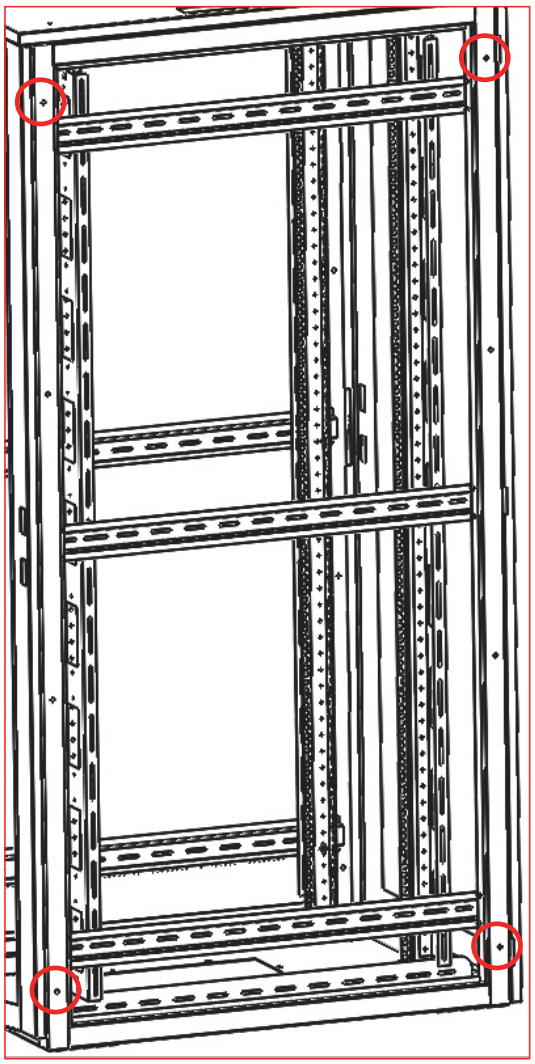

TOP

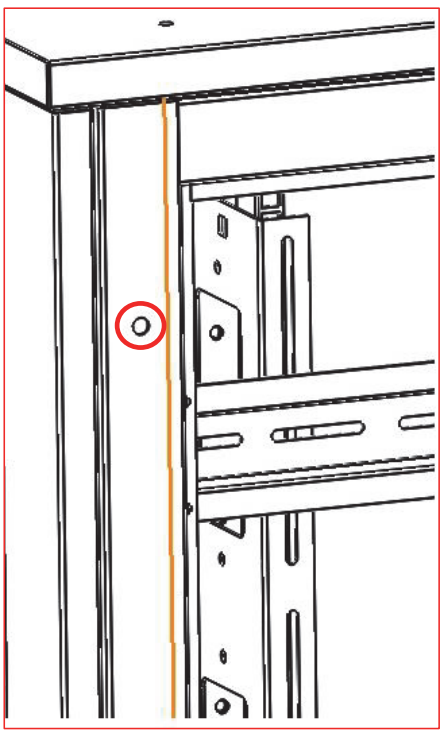

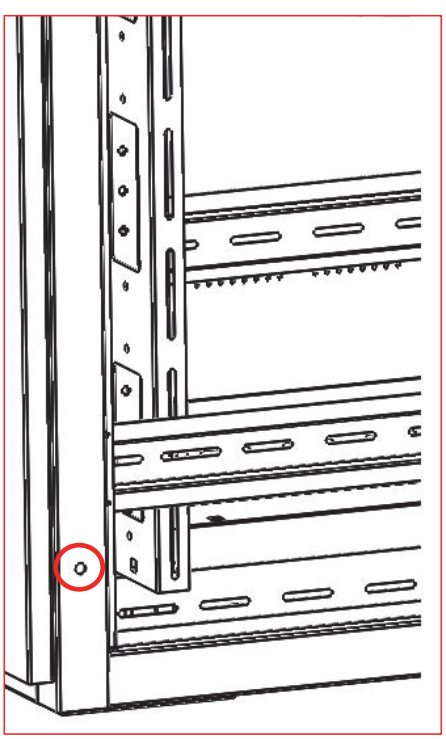

BOTTOM

Hardware

2 – FRONT
2 - REAR

Equipment Rail Adjustment

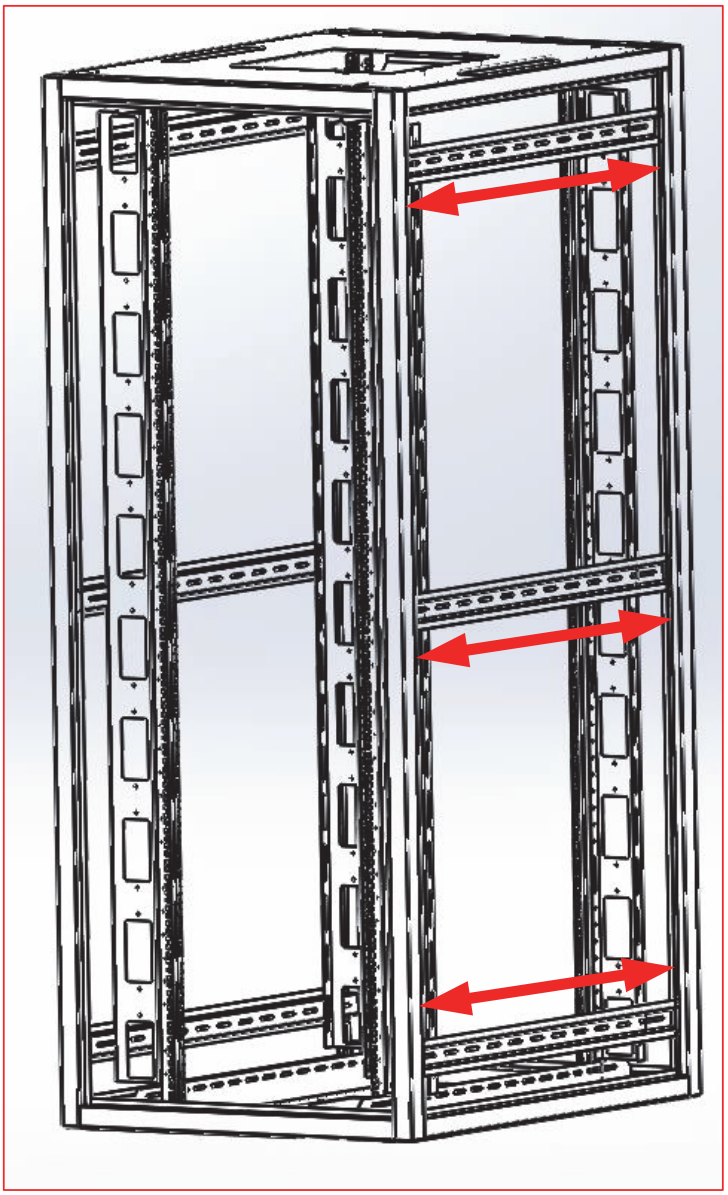

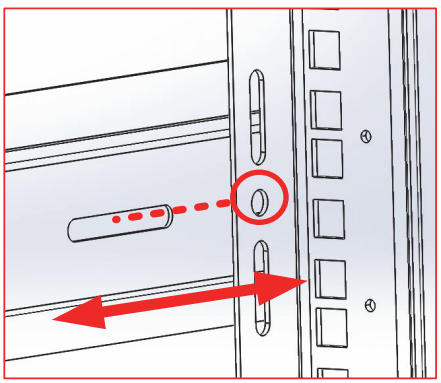

Castor Wheels Installation

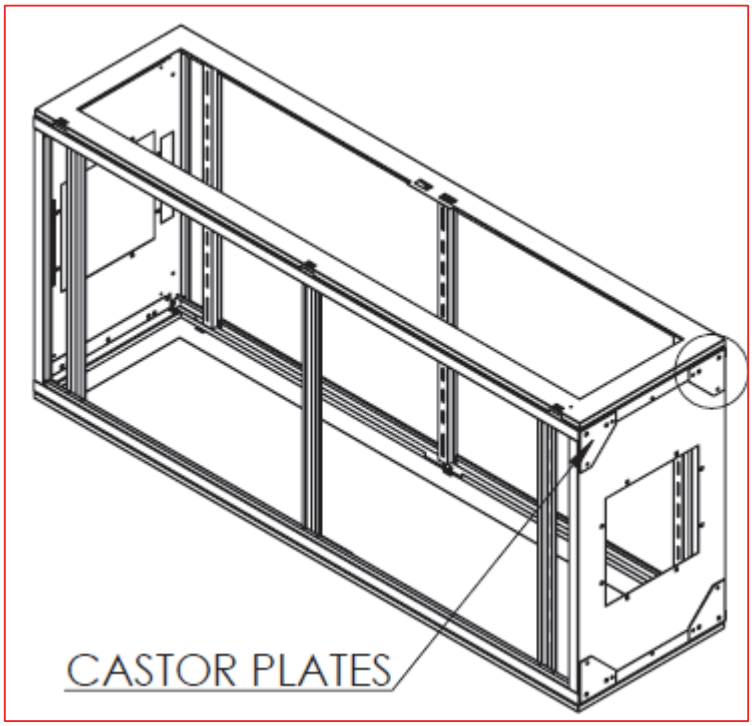

Using (2) technicians, carefully place cabinet on its back

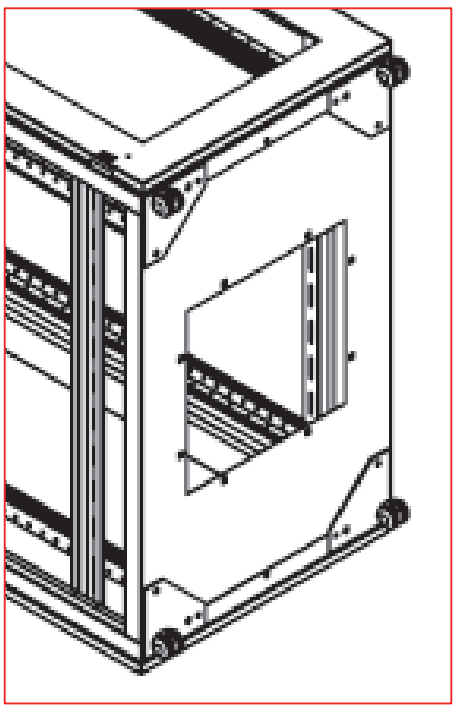

Thread Castor Wheels into threaded holes in the castor plates

Bonding

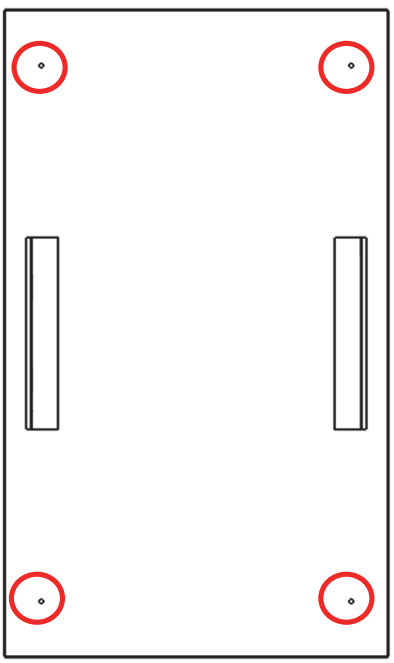

Any 1 of 4 Bonding locations at the Top & Bottom of the Cabinet

USE M6 Nut & Star Washer (NOT INCLUDED)

Notes

To assist safe installations, comply with the following:

A. Use caution when installing or modifying telecommunications circuits.
B. Never touch uninsulated wire terminals unless the circuit has been disconnected.
C. Never install this device in a wet location.
D. Never install wiring during a lightning storm.

Lors de l'installation, respectez les consignes de sécuritésuivantes:

A. Utiliser avec prudence lors de l'installation ou de la modification circuits de télécommunications.
B. Ne jamais toucher les bornes de fil métallique non isolés sauf si le circuit a étédébranché.
C. Ne jamais installer cet appareil dans un endroit humide.
D. Ne jamais installer pendant un orage.

Global Headquarters
Watertown, Connecticut USA
Tel: (1) 866-548-5814

For a complete listing of our global offices visit our web site

SIEMON™
www.siemon.com

INS_100.26313.00_DataKeep_600mm Rev A. 2/19

© 2019 Siemon